| | | |
|---|---|---|
| sales order OOOO | Custom ??? | Date 01-27-11 |
| item OOOO | No. T-1600 | Scale 3/16"=1" |
| finish TBD | ☐ approved<br>☐ approved as noted<br>☐ not approved revise as noted | |

PHONE 540.342.1548 FAX 540.342.1417
WEB RCLFINC.COM

RCL SITE FURNISHINGS

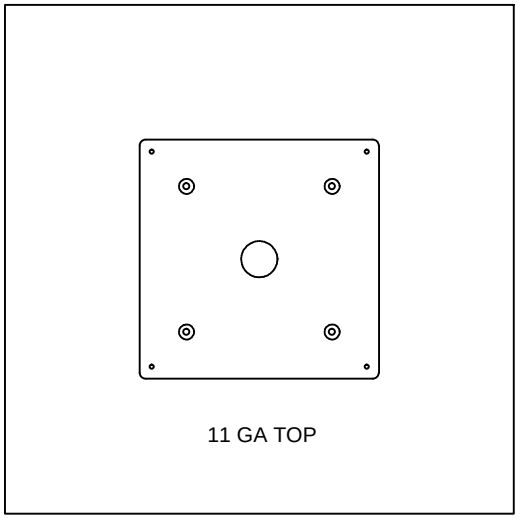
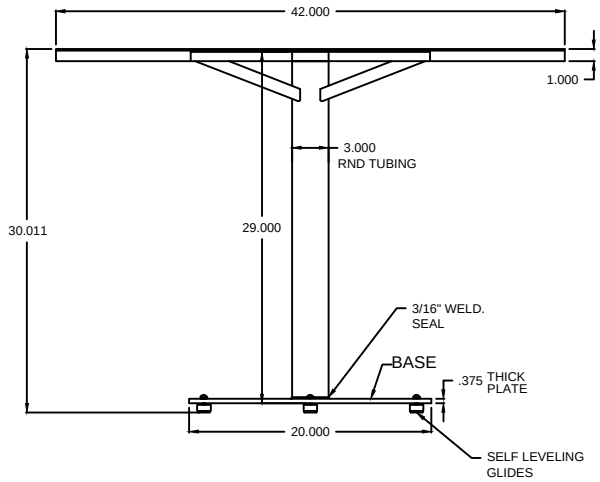
11 GA TOP